NOTES: (UNLESS OTHERWISE SPECIFIED)

1. Lightly Debur all Sharp Edges
2. Etch and clear Chromate optional
3. Bend Radius .06

B-6000-0400-1

SYM	REVISIONS	APPROVED	DATE
A	As Issued	SAM	03/05/00

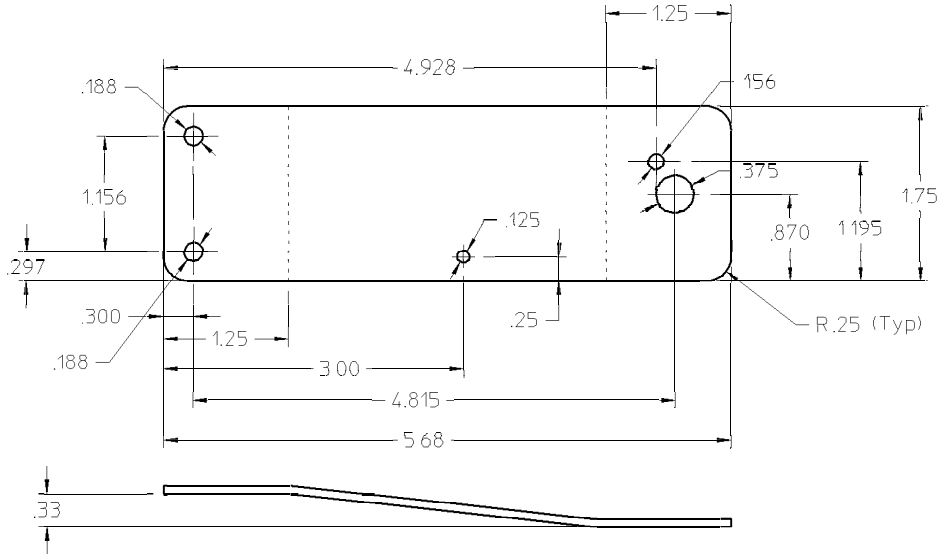

THIS DOCUMENT CONTAINS CONFIDENTIAL, PROPRIETARY INFORMATION THAT IS VISUAL INSTRUMENTS (VI) PROPERTY. DO NOT DISCLOSE TO OR DUPLICATE FOR OTHERS EXCEPT AS AUTHORIZED BY VI.

UNLESS OTHERWISE SPECIFIED
- DIMENSIONS ARE IN INCHES
- THIRD ANGLE PROJECTION
- TOLERANCES

.XX±.03

.XXX±.020

DO NOT SCALE THIS DRAWING

STRIKE OUT OR FILL IN AS NEEDED

ITEM	QTY.	PART/MATERIAL-DESCRIPTION	Vendor	Vendor Part No.	Price
1	A/R	.080 Thick Aluminum 5052, 6061-T6, 2024-T3			

Steve Mahoney DRAWN BY	03/07/96 DATE	Wing Flaps Mounting Bracket	Visual Instruments Inc
Steve Mahoney ENGINEER/CHECKER	03/07/96		
RELEASE TO PROD.		TITLE	PART NUMBER 6000-0400
6000-0400_rev_a FILE		FULL SCALE / 1 SHEET / 1 OF	B-6000-0400-1

Document created by the PCL2PDF evaluation
(C) Copyright 1996-2000 Visual Software
Visual Software http://www.visual.co.uk